

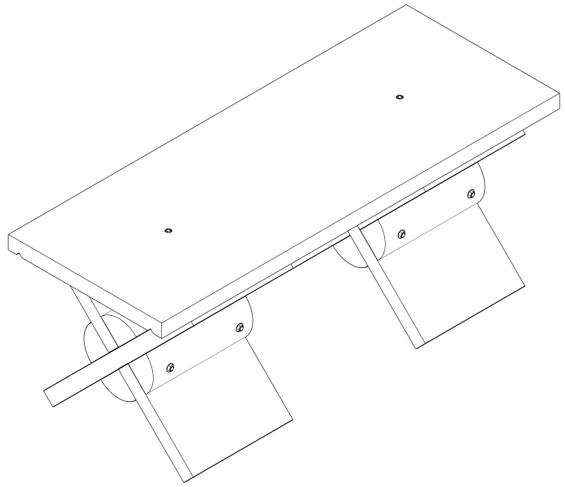





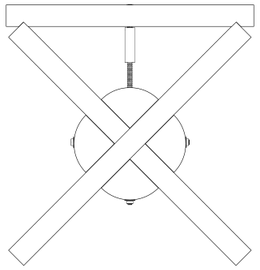

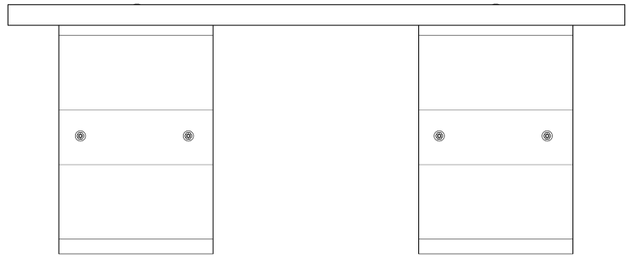

	Section	Length	Quantity
A	40 x 450	1200	1
B	25 - 40 x 300	600	2
C	45º segments radius 50-75	300	8
D	M8 threaded rod + connector	250 100	2 2
E	M8 threaded rod + nuts / washers	225	4

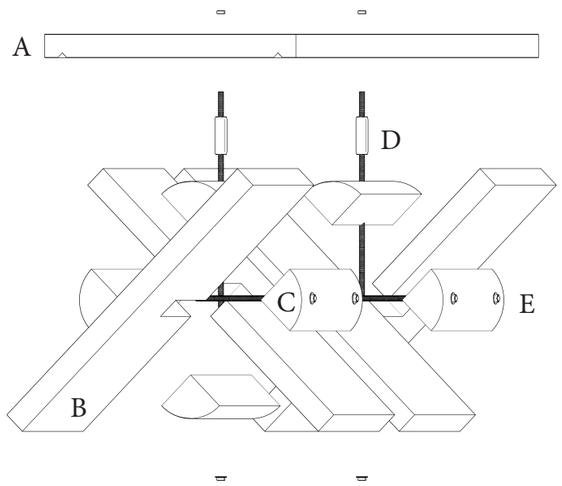

Crown & Coppice Bench

Species:
Oak (Quercus Robur). Sweet Chestnut (Castanea Sativa).

Dimensions:
1200mm (W) x 500mm (H) x 450mm (D)

Inspired by Britain’s traditional 'coppice with standards' woodlands, this bench combines locally sourced oak and coppiced sweet chestnut poles, expressing this centuries-old model of sustainable woodland management. Its distinctive interlocking X-shaped legs pair sawn oak planks with hand-split chestnut, creating a strong, repairable structure while revealing the natural character of each timber. Harvested and processed within a single woodland using low-impact methods, the bench demonstrates how craftsmanship, material stewardship, and regenerative forestry can inform contemporary public design.



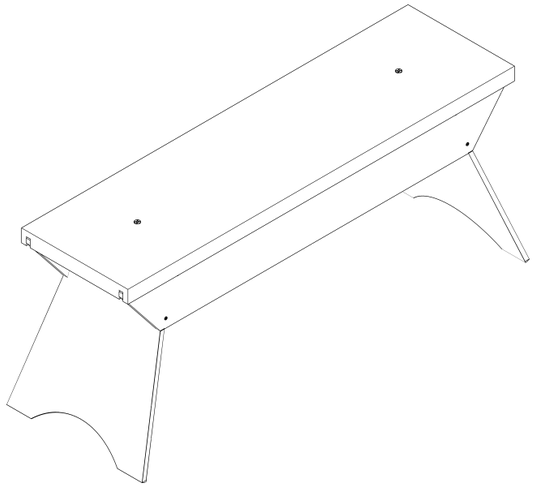



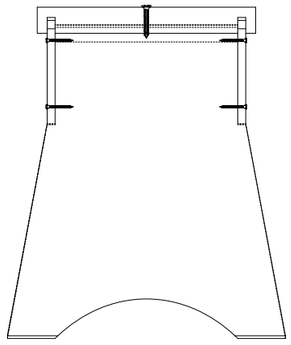





	Section	Length	Quantity
A	40 x 330	1200	1
B	25 x 160	1200	2
C	(25 x 275) top (25 x 420) bot	475	2
D	40 x 40	275	2

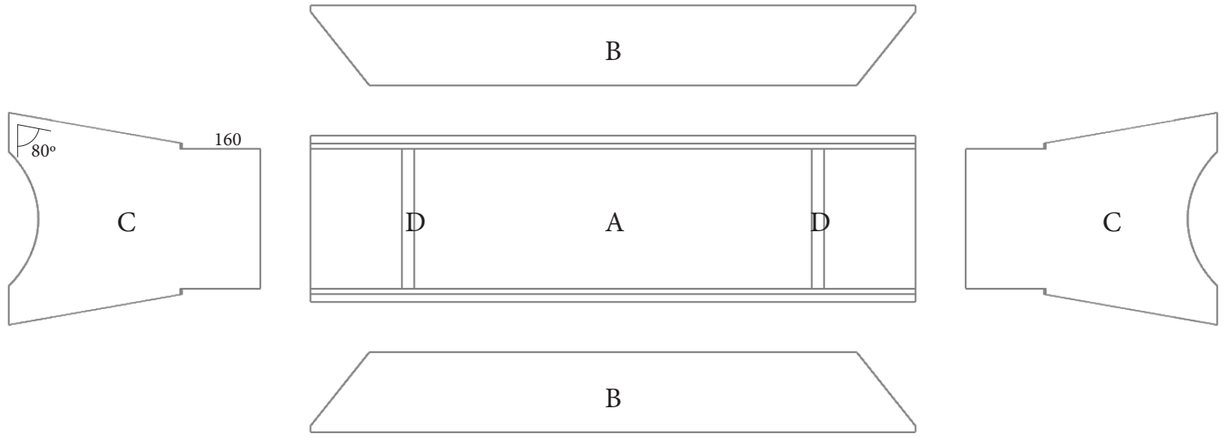

Splayed Bench

Species:
Oak (Quercus Robur).

Dimensions:
1200mm (W) x 450mm (H) x 300mm (D)

Constructed from simple 25mm and 40mm timber boards, this bench is designed to work with, rather than resist, the natural behaviour of freshly sawn green oak as it air-dries over time. The arrangement of components accommodates the timber's tendency to cup, split and move, allowing the structure to adapt while maintaining its integrity. Its distinctive tapering splayed legs provide stability and rigidity through an efficient distribution of loads, while minimal stainless steel fixings support a design philosophy centred on disassembly, repair, and long-term maintenance. By accommodating the natural movement of green oak and enabling future repair, the design promotes durability, adaptability, and long-term stewardship of woodland for timber.



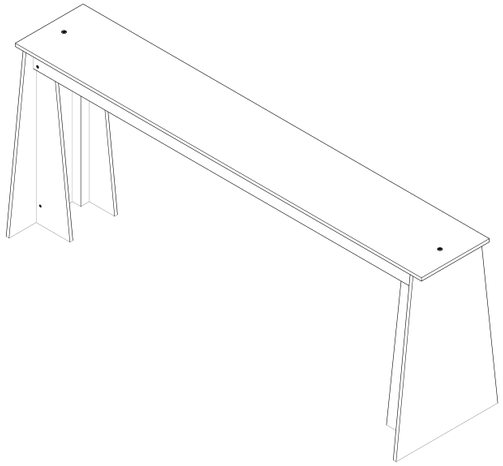



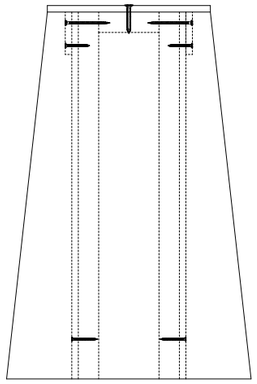





	Section	Length	Quantity
A	8 x 200	1200	1
B	8 x 50	1145	2
C	8 x 100 (top) 8 x 300 (bot)	450 450	2
D	8 x 50 (top) 8 x 100 (bot)	450 (perpendicular)	4
E	25 x 25	450	4
F	25 x 25	75	2

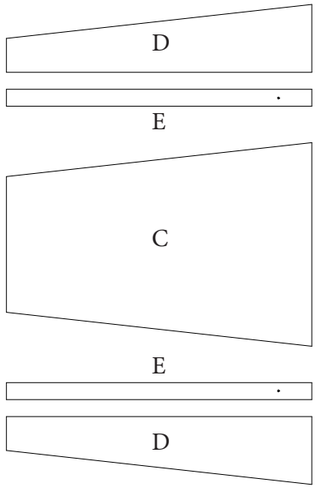

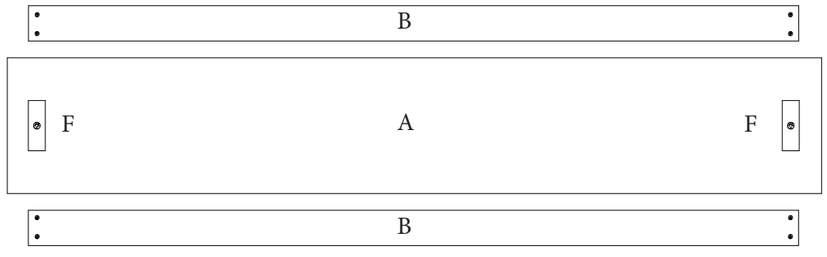

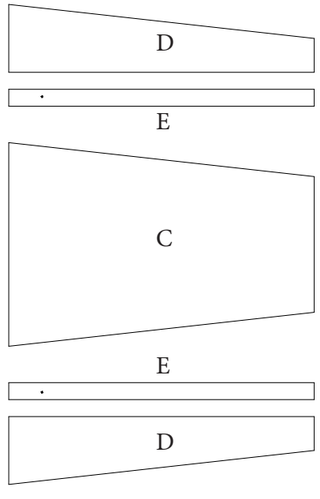

Sheer Bench

Species:
Oak (Quercus Robur).

Dimensions:
1200mm (W) x 450mm (H) x 300mm (D)

Designed for occasional outdoor use by school groups at 'The Clearing', this bench is constructed from slender rough-sawn timber boards assembled with stainless steel screw fixings. The lightweight design allows it to be easily moved, stowed, and adapted for outdoor learning activities, while retaining the strength and durability required for regular use. Its distinctive tapering splayed legs echo the broad base of a tree trunk, providing exceptional stability on uneven ground, as well as sheer strength through an efficient distribution of structural loads. By using simple construction methods and minimally processed timber, the bench celebrates the natural character of sawn material while demonstrating an efficient and economic approach to outdoor furniture design.



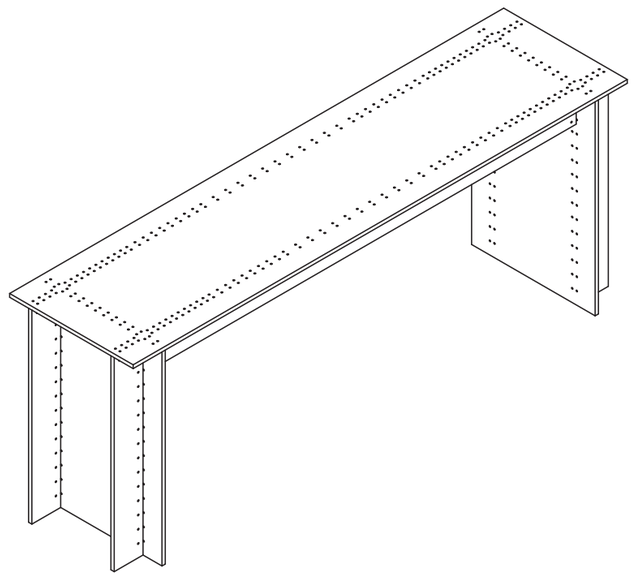

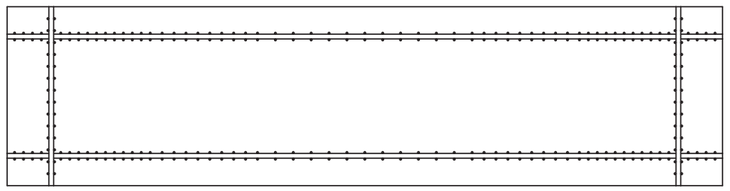

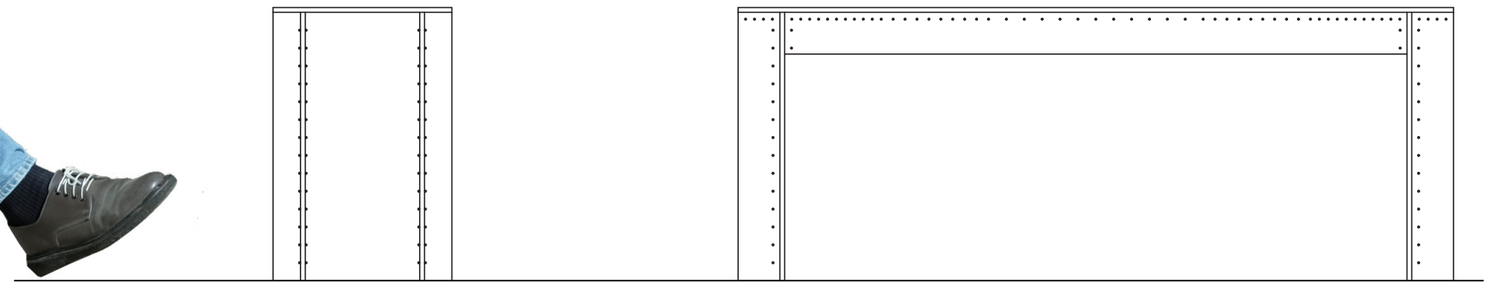

	Section	Length	Quantity
A	8 x 300	1200	1
B	8 x 300	450	2
C	8 x 70	450	4
D	8 x 70	1044	2

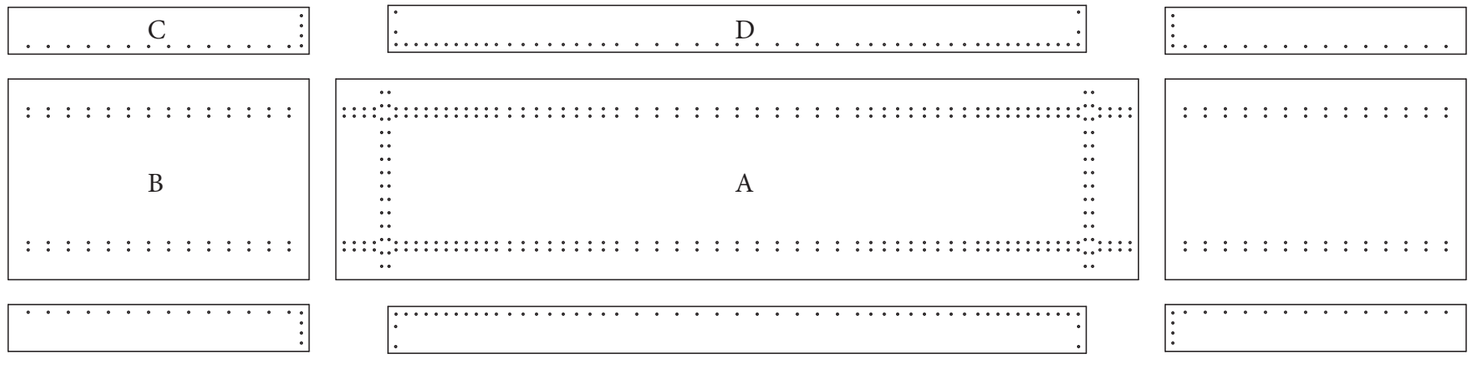

Stitched Bench

Species:
Oak (Quercus Robur). Cherry (Prunus serotina),
Flax (Linum Usitatissimum).

Dimensions:
1200mm (W) x 450mm (H) x 300mm (D)

Constructed entirely from slender rough-sawn timber boards, this occasional bench explores an alternative approach to timber construction inspired by traditional boat-building techniques that pre-date metal fixings. Individual boards are stitched together using flax twine, creating a lightweight yet robust structure that expresses the connection between material, craft, and assembly. The exposed stitching forms both a structural and visual feature, highlighting the bench's construction while accommodating the fresh sawn timber's natural propensity for movement as it dries. By combining traditional techniques with jig-based fabrication methods, the design demonstrates how historic craft knowledge can inform contemporary approaches to sustainable public furniture.





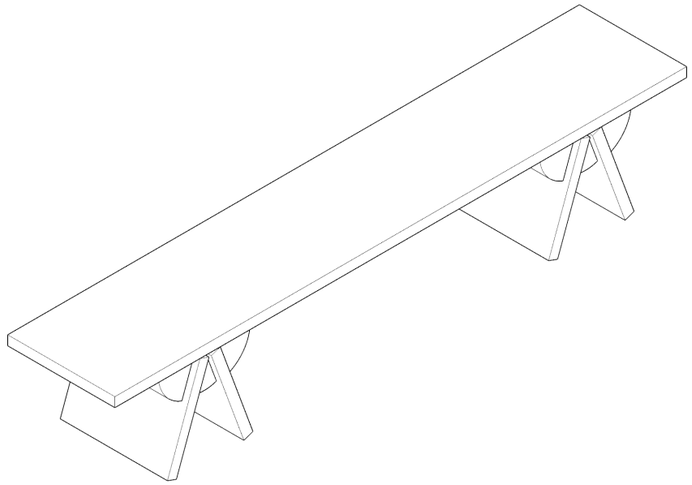

	Section	Length	Quantity
A	40 x 450	2400	1
B	40 x 450	400	4
C	40º x 150 (rad)	400	2
D	70º x 150 (rad)	400	4

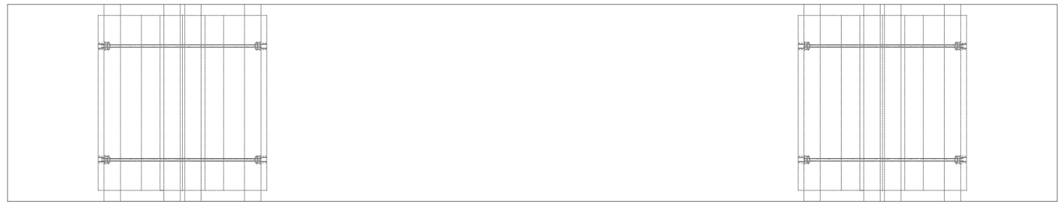

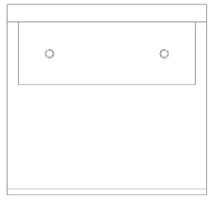

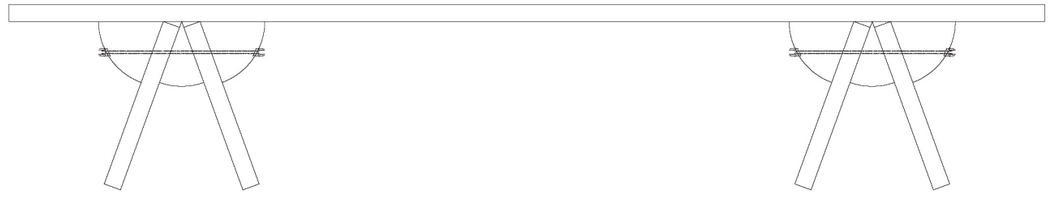

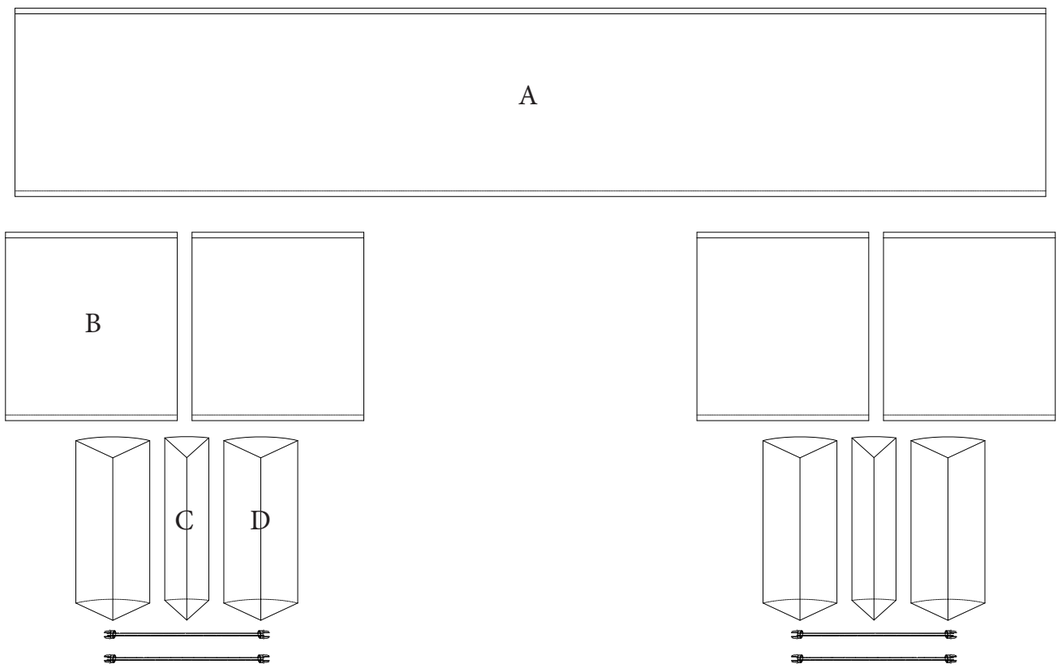

Pi Bench

Species:
Oak (Quercus Robur). Sweet Chestnut (Castanea Sativa).

Dimensions:
2400mm (W) x 450mm (H) x 400mm (D)

Constructed from a 40mm thick oak plank and a split sweet chestnut log, the Pi Bench takes its name from the Greek letter π, referencing both its form and the circular geometry from which its components are derived.
The chestnut log is split into six wedge elements that reinforce the legs and create rigid, perpendicular junctions with the seat. Designed for simplicity of construction using hand tools and economic cuts of timber, the bench combines accessibility, with strength, durability and frugality. The bench is intended as a legible demonstration of how simple woodland timber forms can be combined into robust, repairable and low cost furniture, using underutilised coppice and waney edged oak.